Informatics – Data Science Track

Phase 1

Classes to be completed in your first or second semester in the major

Phase 2

Classes likely to come after Phase 1 courses

Phase 3

More advanced courses to be completed near the end of your program

Electives

- 300 level or above
- No more than 2 may be COMPSCI courses
- No more than 4 may be Isenberg courses
- No more than 3 may be counted towards a separate major/minor

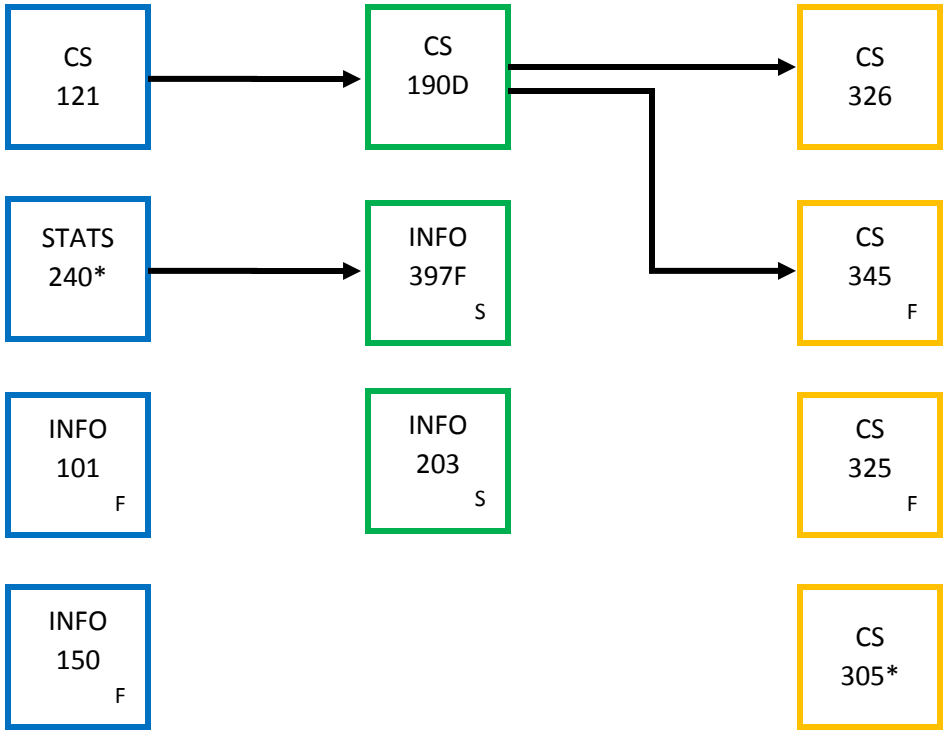

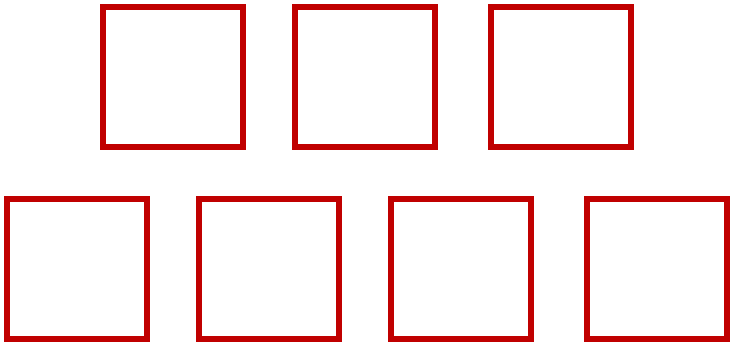

Elective Options

OIM 301: Operations Management

OIM 453: Business Intelligence and Analytics (S)

MARKET 301: Fundamentals of Marketing

MARKET 455: Internet Marketing

SCH-MGMT 397B: Internet Technology & e-Business (S)

PUBHLTH 490ST: Telling Stories with Data (F)

JOURNAL 397DJ: Data Driven Storytelling

COMPSCI 390MB: Mobile Health Sensing & Monitoring (F)

STAT 501: Methods of Applied Statistics

STAT 515: Statistics I

STAT 516: Statistics II

* An equivalent course can be taken in place of this requirement